All the Same or Different?

Revisiting Measures of Teachers' Technology Acceptance

Ronny Scherer

University of Oslo, Norway

Fazilat Siddiq

University of South-Eastern Norway, Norway

Jo Tondeur

Vrije Universiteit Brussel (VUB) and Ghent University, Belgium

Author Note

Ronny Scherer, Centre for Educational Measurement at the University of Oslo (CEMO), Faculty of Educational Sciences, University of Oslo; Fazilat Siddiq, Unit for Digitalisation and Education (eDU), Department of Education and Quality in Learning, University of South-Eastern Norway; Jo Tondeur, Vrije Universiteit Brussel (VUB) and Ghent University, Belgium.

Correspondence concerning this article should be addressed to Ronny Scherer, University of Oslo, Faculty of Educational Sciences, Centre for Educational Measurement at the University of Oslo (CEMO), Postbox 1161 Blindern, NO-0318 Oslo; E-Mail: ronny.scherer@cemo.uio.no

This manuscript was published in the journal Computers & Education: https://doi.org/10.1016/j.compedu.2019.103656

Abstract

Technology acceptance has been widely discussed and examined in educational contexts. Despite the variety of models and measures describing teachers' technology acceptance, two key assumptions persist in the existing body of literature: First, the technology acceptance construct can be represented by a set of diverse, yet correlated attitudes and beliefs. Second, the effects of technology acceptance on the intentions to use technology and technology use—two commonly studied outcome variables—follow a cascade. The existing evidence backing these assumptions is, however, diverse, as the considerable between-study variation in the relations between the technology acceptance and outcome variables shows. This variation remained largely unexplained, and the present study offers an explanation from the perspective of construct validity. Analyzing a large meta-analytic sample (N = 37211 teachers) obtained from a previous meta-analysis, we synthesized the correlations among measures of teachers' technology acceptance and found support for the existence of a common trait that underlies all technology acceptance variables. This finding remained even after distinguishing between different teacher samples (i.e., pre- vs. in-service teachers) and types of technology (i.e., technology in general vs. specific technologies). There was no convincing evidence for the hypothesized cascade of effects, due to a weak and insignificant link between usage intentions and technology use. Our findings provide evidence for the representation of teachers' technology acceptance as a single latent variable and consequently offer a way to describe its relations to usage intentions and technology use without compromising the validity of the inferences drawn from them.

Keywords: Attitudes toward technology; meta-analysis; structural equation modeling; teachers; technology acceptance

Highlights

- Technology acceptance measures comprise attitudes and beliefs.
- Ongoing debates question the distinction between these measures.
- We meta-analyzed a large sample of teacher studies to test different factor models.
- A one-factor model described the structure of the measures best.
- Technology acceptance measures represent a common trait.

All the same or different? Revisiting measures of technology acceptance

1. Introduction

Without any doubts, technology has found its way into many classrooms and curricula around the world. Despite the great potential technology may have for facilitating and fostering student learning (Archer et al., 2014; Chauhan, 2017), teachers are challenged to not only familiarize themselves with the technologies but also with their meaningful integration into teaching (Lawless & Pellegrino, 2007). This integration, however, does not "happen" automatically, and current research shows that several factors determine the success or failure of technology integration (Straub, 2009). These factors are summarized under the umbrella of "technology acceptance" and comprise attitudes and beliefs (e.g., Marangunić & Granić, 2015), such as the perceived usefulness of technology (PU), ease of use (PEOU), attitudes toward technology (ATT), technology self-efficacy (TSE), subjective norms (SN), and facilitating conditions (FC).

Despite the accumulation of empirical studies that examined the relations among these constructs and their prediction of usage intentions (BI) and reported usage of technology (USE), the existing body of literature abounds in diverse findings (Marangunić & Granić, 2015; Scherer et al., 2019). As Scherer and Teo (2019) recently observed, this diversity manifests in the considerable variation of the relations between the technology acceptance and the outcomes variables across studies, samples, and contexts. To mention a few examples of this diversity, Ritter (2017) found a strong relation between ATT and usage intentions (β = 0.61), while Schepers and Wetzels (2007) identified a weak relation (β = 0.16). Moreover, Zhang et al. (2012) could not find support for a significant relation between PU and usage intentions (β = 0.07), whereas King and He (2006) identified a strong and positive relation (β = 0.51). Even in meta-analyses, the synthesized correlations to the two outcome variables vary substantially (for an overview, see Scherer et al., 2019), and the current attempts to

explain this variation by study, sample, and contextual variables resulted in only small variance explanations (e.g., King & He, 2006; Schepers & Wetzels, 2007; Scherer et al., 2019; Scherer & Teo, 2019).

One alternative explanation of this diversity that has been largely unexplored refers to one of the key assumptions underlying technology acceptance studies—that is, the assumption that the technology acceptance variables are all representative of the technology acceptance construct, yet represent different aspects of it (Abdullah & Ward, 2016; Bagozzi, 2007; Nistor, 2014; Turner et al., 2010). Nistor (2014), for example, argued that the technology acceptance variables are oftentimes highly correlated and may therefore be indicative of a single technology acceptance construct rather than multiple, loosely connected constructs. Scherer et al. (2018) showcased that ignoring such substantial correlations can severely bias the effects on outcome variables and, ultimately, the inferences drawn from them. Consequently, examining how technology acceptance can be represented as a construct measured by several indicators is part of the crafting of a validity argument (American Educational Research Association, American Psychological Association, & National Council on Measurement in Education, 2014). To our best knowledge, this perspective has largely been ignored, and only few studies exist that tested the assumption of an overall technology acceptance construct represented by multiple indicators, namely PU, PEOU, ATT, TSE, SN, and FC (Teo et al., 2014).

Taking a construct validity perspective, we offer an explanation for the divergent findings surrounding the relations between the technology acceptance and the outcome variables by (a) examining the factor structure of the technology acceptance construct for teacher samples, and, on the basis of the resultant factor structure, (b) testing the relations to the two outcome variables that are assumed to follow a cascade of effects: Technology acceptance → Intentions to use technology → Technology use (see Figure 1; Marangunić &

Granić, 2015). Ultimately, the knowledge gained from these two lines of inquiry will aid the crafting of a validity argument of the technology acceptance construct. Our study is based on an existing, large-scale data set that was obtained in a meta-analysis of teachers' technology acceptance (Scherer et al., 2019) and draws from the recent methodological advances in meta-analytic structural equation modeling (Cheung, 2015).

2. Theoretical Perspectives

2.1 Technology Acceptance Models and Measures

Technology acceptance has been operationalized in many studies, and the extant body of literature defines this construct as a set of technology-related attitudes and beliefs that explain a person's intentions to use and actual use of technology (Davis, 1985). These attitudes and beliefs typically include diverse variables (e.g., Davis, 1989; Fishbein & Ajzen, 1975; Scherer et al., 2019; Venkatesh et al., 2003) and can be considered attributes of the technology acceptance construct:

- *Perceived ease of use (PEOU):* A person's belief about the degree to which using technology is effort-free.
- *Perceived usefulness (PU):* A person's belief about the degree to which the technology is useful in order to increase his or her performance.
- *Attitudes toward technology (ATT):* A person's general evaluation of technology or a behavior associated with its use.
- *Technology self-efficacy (TSE):* A person's self-belief about the degree to which he or she will be able to perform a specific task using technology.
- *Subjective norms (SN):* A person's perceptions of the degree to which people who are important to him or her think that he or she should or should not use technology.

- *Facilitating conditions (FC):* A person's perception of the degree to which organizational and technical resources exist that support the use of technology.

Besides these variables representing technology acceptance, a person's intention to use technology, often labelled as "behavioral intentions (BI)", and their use of technology (USE) are considered outcome variables in technology acceptance models (King & He, 2006). All models assume that technology users' attitudes and beliefs, along with external factors, stimulate usage intentions and the use of technology as a response (Marangunić & Granić, 2015). This assumption has led to a wealth of models that describe how the abovementioned variables are related to the two outcome variables (Al-Emran et al., 2018). For instance, the original Technology Acceptance Model (TAM) hypothesizes structural relations between the variables PEOU, PU, and ATT. ATT predicts BI, and BI ultimately predicts USE (Davis, 1989). This model has pervaded all subsequent technology acceptance models and is therefore considered the basis for describing the mechanisms behind technology acceptance (Schepers & Wetzels, 2007). Later on, this model was extended by external variables, such as SN, TSE, and FC (e.g., Abdullah & Ward, 2016; Marangunić & Granić, 2015).

Resulting from the updates and extensions of the TAM, the Unified Theory of Acceptance and Use of Technology (UTAUT) represents technology acceptance slightly differently than the TAM: Whereas the TAM considers both the external variables and the perception-based variables PEOU, PU, and ATT to be indicators of technology acceptance, technology acceptance is indicated by SN, FC, performance expectancy, and effort expectancy in the UTAUT (Venkatesh et al., 2003). Although labelled differently, Nistor and Heymann (2010) showed that the latter two correspond to PU and PEOU. The UTAUT hypothesizes direct effects of these technology acceptance variables on BI, which in turn predicts USE. The Theory of Planned Behavior (TPB) follows a similar setup of structural relations, yet groups the technology acceptance variables into behavioral, normative, and

control beliefs (Holden & Karsh, 2010). The Decomposed Theory of Planned behavior (DTPB) further assumes that ATT is predicted by PEOU, PU, and the perceived compatibility of technology, SN is predicted by both peer's and superior's influence, TSE and FC predict a person's perceived behavioral control, and these three variables predict BI (e.g., Huh, Kim, & Law, 2009). Overall, these models assume a set of variables to be indicative of technology acceptance and organize them by hypothesizing structural relations or groupings among them (e.g., Šumak et al., 2011; Turner et al., 2010). Moreover, independent of the variety of labels and variables included in technology acceptance models, these models all assume that technology acceptance is predictive of usage intentions and technology use as part of the nomological network of the technology acceptance construct (Marangunić & Granić, 2015). This assumption is often referred to as a "cascade of effects" and includes a link between BI and USE as well (Scherer et al., 2019; Figure 1).

In fact, the grouping of the technology acceptance variables (i.e., PEOU, PU, ATT, TSE, SN, and FC) can be approached from several perspectives (e.g., Scherer et al., 2019; Venkatesh & Bala, 2008): (1) SN and FC both represent external variables and refer to sources outside of the Self (i.e., to other persons or external conditions), whereas PEOU, PU, ATT, and TSE represent internal variables, as they refer to the Self in the form of self-beliefs (TSE) and beliefs about the interaction between technology and a person (PEOU, PU, and ATT). Within the latter group, even more conceptual similarities exist. For instance, the perceived ease of use reflects the degree to which a person believes that technology is easy to use to accomplish a certain task. This belief is, to some extent, also reflected in the person's self-efficacy which represents competence beliefs. In this sense, both PEOU and TSE share commonalities, and empirical studies testified that the two constructs are interwoven (Scherer, Siddiq, & Teo, 2015); (2) One may distinguish further between the beliefs related to the interaction between technology and the Self (PEOU and PU) and the attitudes and self-beliefs

(ATT and TSE), next to the external beliefs (SN and FC). The close relationship between ATT and TSE, for instance, surfaced in many studies of technology acceptance (e.g., Scherer et al., 2018); (3) Finally, it could also be assumed that all variables represent the technology acceptance construct without any grouping (Teo et al., 2014). This assumption is based on the finding that the technology acceptance variables are all substantially intercorrelated (Scherer et al., 2019; Yen, Sousa, & Bakken, 2014), perhaps due to their conceptual overlap (i.e., they all represent attitudes and beliefs related to technology) and the common method variance their assessments share (i.e., they are all assessed by self-reports; see Sharma, Yetton, & Crawford, 2009). Independent of the causes for these intercorrelations, Nistor (2014) argues that the technology acceptance construct may therefore be considered unidimensional. To summarize, the technology acceptance construct is represented by a set of intercorrelated yet diverse attitudes and beliefs which are assumed to predict a person's usage intentions and ultimately their use of technology.

2.2 The Diversity of Findings on the Relations between Technology Acceptance and Outcome Variables

As noted earlier, technology acceptance has been in the focus of many studies, resulting in a large body of research across diverse samples, contexts, technology acceptance models, and technologies. Ultimately, the shier amount of studies has resulted in very diverse, sometimes even conflicting findings surrounding technology acceptance. Marangunić and Granić (2015), for instance, pointed out that the relations among the technology acceptance variables and their predictive power concerning the intentions to use technology and technology use vary substantially between studies. Nistor (2014) highlighted that several studies identified insignificant relations between these variables, while others showed moderate to high relations. The claim that these relations are robust across many study conditions and contexts may therefore not hold (Hsiao & Yang, 2011; Schepers & Wetzels,

2007). Moreover, the hypothesized cascade of effects was confirmed in some studies but rejected in others (Nistor, 2014; Scherer et al., 2019).

While several meta-analyses were aimed at explaining the variation in these relations, the between-study variances remained largely unexplained. For instance, King and He (2006) found consistent and significant moderator effects of the type of technology usage and users' experience on several relations; Schepers and Wetzels (2007), however, could not confirm these consistent effects. Similarly, Šumak et al. (2011) found small to medium variance explanations by moderator variables for most relations among the technology acceptance variables. Zhang et al. (2012) further testified to some significant moderator effects of participants' cultural background, yet with small effect sizes. Scherer et al. (2019) observed some subgroup differences between Asian and non-Asian samples, pre- and in-service teachers, and the type of technology referred to in the assessments of the technology acceptance variables—these differences were, however, only marginal. Focusing on a reduced version of the technology acceptance model with PU, PEOU, and ATT as variables predicting BI, Scherer and Teo (2019) observed substantial variation in the effects on BI between the 45 studies of teachers' technology acceptance. The variance explanation by study and sample characteristics was mainly marginal (with a range between 0 % and 14 %), except for teachers' age and the proportion of female teachers in the samples explaining up to 52 % and, respectively, 36 %. The authors, however, encouraged researchers in the field to replicate these findings with different modeling approaches and larger samples. Overall, these findings suggest that most of the between-study variation was left unexplained by the moderators the meta-analysts selected.

We believe that another explanation for this diversity lies in the validity of the technology acceptance variables in general and the extent to which they represent different facets of the same construct in particular. As explained earlier, the technology acceptance

variables share many commonalities: They all represent perceptions of aspects related to technology, they all tap attitudes and beliefs, and they are all assessed by self-reports thus sharing common method variance. At the same time, they all have unique features: To recall, FC and SN represent external beliefs that refer to either contextual conditions or norms associated with an external group, while ATT, PU, PEOU, and TSE represent self-beliefs and perceptions of technology related to the self. These two perspectives—the commonalities and uniquenesses—explain the substantial, yet not perfect correlations among the variables (e.g., Scherer et al., 2019; Teo, 2015). The question, however, remains whether and to what extent these variables represent an overall technology acceptance construct (Nistor, 2014). Teo et al. (2014), for instance, found that a second-order factor of technology acceptance could be established that was indicated by the technology acceptance variables as first-order factors. The authors consequently concluded that the first-order variables represented a common construct which they interpreted as technology acceptance.

Furthermore, if indeed the technology acceptance variables are moderately or even highly correlated, the prediction of the intentions to use technology and technology use may be compromised due to an issue referred to as 'multicollinearity'. Multicollinearity occurs when independent variables in regression-based models are highly related (Farrar & Glauber, 1967). It can have severe effects on both the reliability and the interpretation of model parameters as it may bias regression coefficients substantially. Marsh et al. (2004), for instance, explored the relations between self-efficacy, self-concept, and academic achievement in mathematics only to find that the high correlation between self-efficacy and self-concept caused unreliable regression coefficients in the prediction of achievement that have rendered erroneous conclusions. The authors consequently warned researchers against assuming that constructs may be distinct while they are not. Similarly, Scherer et al. (2018) showed that different aspects of teachers' attitudes toward technology were highly correlated,

thus providing counterintuitive and contradictory findings. The authors conclude that researchers need "to account for the methodological issues caused by high correlations among several dimensions of attitudes toward ICT" (p. 78). We believe that the sometimes-strong relations among the technology acceptance variables found in empirical studies may have caused some of the diverse findings in the field.

Overall, in light of our review of the extant literature, we observe that (a) the technology acceptance variables are oftentimes substantially correlated; (b) the cascade of effects could not be confirmed in all studies of technology acceptance.

2.3 The Present Study

To summarize, the current body of research on technology acceptance is based on two key assumptions: First, the simplistic view in the existing technology acceptance models considers all of the seemingly different types of indicators, including attitudes, beliefs, and perceptions of external factors, to be representative of the construct, yet represent different aspects of it. Second, the relations between technology acceptance, the intentions to use technology, and the actual use are assumed to be positive, significant, and follow a cascade (see Figure 1).

Concerning the first assumption, clear empirical evidence for the homogeneity of the technology acceptance variables is sparse (Nistor, 2014). Some of these studies described the structural relations among technology acceptance measures within specific technology acceptance models, and resulted in either a multidimensional (e.g., Hong & Walker, 2015; Teo, 2018) or unidimensional representations of technology acceptance (e.g., Jones et al., 2010; Teo et al., 2014). Although some attempts have been made to synthesize the existing relations among technology acceptance variables meta-analytically (for an overview, please refer to the Supplementary Material, Table S2), only the recent methodological advancements in meta-analysis have made it possible for researchers to study the dimensionality and factor

structure of measures based on meta-analytic data (Cheung, 2015; Cheung & Cheung, 2016). Given the common finding that technology acceptance variables are often substantially correlated, it may therefore be tested explicitly and meta-analytically whether they represent one common trait, that is, technology acceptance. If, indeed, the different technology acceptance variables represent a common factor, this finding would provide evidence for the validity of an overall technology acceptance measure. Concerning the second assumption, much of the criticism surrounding the technology acceptance measures and models was based on small sets of primary studies and meta-analyses, with the latter synthesizing the data derived from quite different samples and a broad range of contexts (Scherer et al., 2019). Both assumptions are validity issues, and the lack of evidence supporting them and the large diversity of findings surrounding them represent threats to the construct validity of technology acceptance (American Educational Research Association, American Psychological Association, & National Council on Measurement in Education, 2014).

To address these validity issues, the present study examines the factor structure of the technology acceptance measures and the relations among technology acceptance, behavioral intention, and technology use based on a large-scale, meta-analytic sample of teachers. Examining the factor structure includes the testing of several, theory-driven factor models that are based on different assumptions on the grouping of the technology acceptance variables (see Figure 2): *Model 1* represents technology acceptance as a unidimensional construct assuming that there is one common factor underlying all technology acceptance measures. *Model 2* assumes two factors of technology acceptance, one of which captures internal beliefs (i.e., ATT, PEOU, PU, and TSE) and one of which captures beliefs influenced by external sources (i.e., FC and SN). *Model 3* assumes three factors of technology acceptance, two of which have split the measures of technology perceptions (i.e., PEOU and PU) from measures

of attitudes and self-beliefs (i.e., ATT and TSE). In the present study, we specify and compare these models addressing the following research question:

1. To what extent can the three proposed factor models represent the structure of the technology acceptance construct for the full sample of studies and subgroups within the sample? *(Factor structure)*

Next, as the intentions to use and the reported use of technology are considered outcome variables of technology acceptance (Davis, 1989), the prediction of these two variables addresses aspects of criterion validity (Price, 2017). To synthesize the evidence on the relations among technology acceptance, behavioral intentions, and technology use, including the cascade of their effects, we focus on a second research question:

2. To what extent are the factors of technology acceptance—as they are identified under research question 1—related to teachers' usage intentions and their reported use of technology? (*Relations to BI and USE*)

In the present study, we focus on samples of pre- and in-service teachers for several reasons: First, studies of technology acceptance in the context of education heavily focus on teachers as the decision-makers for including technology in their day-to-day teaching practices (Siddiq et al., 2016). Teachers have a large degree of autonomy in their teaching practice and, consequently, also have the autonomy to select specific technological applications or not (Teo et al., 2009; Vangrieken et al., 2017). This observation motivates the study of whether and why teachers voluntarily accept technological applications in their educational practice. Second, although the use of technology does not represent a new issue to educational research, its integration, however, is still challenging for teachers (Pynoo et al., 2011). According to these authors, teachers constantly need to adapt to new technologies and refine their competencies in order to integrate technology into their teaching and learning processes. Besides, the increased focus on digital competences and technology in school

curricula requires the teachers to accept and update their own classroom practices (Siddiq et al., 2016). As a consequence, the focus on teacher samples in the present study was motivated by the relevance of understanding technology acceptance and ultimately technology integration in classrooms (Straub, 2009), the focus of existing technology acceptance research in education on teachers (Scherer et al., 2019), and the repeatedly reported challenges teachers face while integrating technology into their teaching (Pynoo et al., 2011).

3. Material and Methods

3.1 Description of the Meta-Analytic Dataset

3.1.1 Choice of data. This study re-analyzes a recently published, large-scale, and meta-analytic data set of technology acceptance variables that had been obtained from more than 30,000 pre- and in-service teachers (Scherer et al., 2019). The primary studies included in the data set contained the following technology acceptance variables: perceived ease of use, perceived usefulness, attitudes toward technology, subjective norms, facilitating conditions, and technology self-efficacy. In addition, the authors included measures of behavioral intentions and the reported technology use in classrooms as two key outcome variables. The details about the search and screening processes are described in Scherer et al. (2019). Moreover, the coded study data are presented in the supplementary material (Table S1).

We chose this data set for several reasons: First, all data were accessible openly so that any researcher in the field could test hypotheses on the technology acceptance measures. Second, these data resulted from a screening process that only allowed for empirical studies of technology acceptance with pre- or in-service teacher samples, contained at least three technology acceptance variables and their corresponding correlations, and focused either on technology in general or specific technologies. These selection criteria are in line with the typical criteria of meta-analyses in the context of technology acceptance (see King & He, 2006; Schepers & Wetzels, 2007). Third, the data set contained rich information about the

study, sample, and measurement characteristics, including the reliability coefficients of measures and the publication status (see Supplementary Material, Table S1). Fourth, the correlations in the data set showed minimal publication bias, and possible outliers were removed. Fifth, the meta-analytic data were representative of the population of technology acceptance studies of teachers that had been published between 2000 and 2017. We believe that these aspects point to the unique quality of this data set and its appropriateness for the present study. In line with the strive for replicating findings and using open-access data for follow-up analyses (e.g., Gewin, 2016; Open Science Collaboration, 2015), we re-analyzed this existing data set and this ensured that our findings can provide alternative explanations of the conflicting findings surrounding the relations among the technology acceptance variables.

After reviewing the initial meta-analytic sample (m = 142 correlation matrices from 130 studies) presented by Scherer et al. (2019), a sample of m = 128 correlation matrices that provided k = 1113 correlations between the technology acceptance and outcome variables could be used for the present meta-analysis. This sample differed slightly from the final sample the authors based their analyses on, because Scherer et al. (2019) were aimed at testing several technology acceptance models and had to ensure that the same sample was used across all models. Due to the fact that these models comprised a different set of variables, some correlation matrices may have been positive definite for one model but non-definite for the other. As a consequence, we set out with the initial sample of primary studies before the positive definiteness check had been performed.

3.1.2 Study characteristics. In total, N = 37211 teachers participated in the primary studies, 47.7 % of whom were in-service and 52.3 % pre-service teachers. The primary sample sizes ranged between N = 29 and N = 1981 (M = 291, SD = 248), and about 64.7 % of the teachers were women (SD = 19.4 %). Teachers' mean age was 30.5 years (SD = 8.4, Min = 19.4, Max = 47.0 years). All primary studies were published between 2002 and 2017,

focused either on technology in general (51.6 %) or specific technologies (48.4 %), such as learning management systems, tablets, or specific software, and were conducted primarily in Asian countries (63.3 %), such as Singapore, Taiwan, SAR Hong Kong, and Malaysia, followed by countries in the Americas (16.4 %), such as Brazil and the United States of America, Europe (14.1 %), such as Belgium, Norway, and Spain, Australia, New Zealand, and others (6.2 %). A detailed account of the countries is given in the supplementary material (Table S1).

3.2 Data Analysis

3.2.1 Correlation-based meta-analytic structural equation modeling (MASEM).

Each and every primary study contributed with at least two correlations among the technology acceptance variables—the resultant meta-analytic data set consequently had a nested structure in which multiple correlations were nested in studies. Only few technology acceptance meta-analyses have taken into account this data structure (see Supplementary Material, Table S2). Although such a data structure violates the key assumption of effect size independence in traditional, univariate meta-analysis (Borenstein et al., 2009), recent methodological developments resulted in models that can accommodate these dependencies (Cheung, 2015). These models explicitly consider the covariances between effect sizes and their variance components to provide accurate parameter estimates. For the current data set, meta-analytic structural equation model (MASEM)—a recently developed method bringing together meta-analysis and structural equation modeling—was chosen to address the nested data structure and to test a series of models representing the factor structure of technology acceptance. Two forms of MASEM allowing for random effects in correlations are dominating the literature and research: correlated-based and parameter-based MASEM (Cheung & Cheung, 2016). Whereas the latter allows researchers to synthesize specific parameters in a structural equation model (e.g., indirect effects, factor loadings, covariances), quantify their heterogeneity

between studies, and explain this heterogeneity by categorical and/or continuous moderators, the former is more suitable when (a) several structural equation models are tested and compared, (b) some correlations in the correlation matrices of the primary studies are missing, and (c) structural equation models are compared between subgroups of studies (Cheung, 2015). Given that our research questions were concerned with the testing of several factor models and our data had missing correlations, we chose to perform correlation-based MASEM.

Correlation-based MASEM, in its original form, follows two steps (Cheung & Chan, 2005): In the first step, the correlation matrices obtained from the primary studies are synthesized to an overall population correlation matrix. This stage is based on maximum-likelihood estimation and therefore allows for missing correlations in the primary correlation matrices. From this step, an overall correlation matrix, its variance components comprising the sampling and between-study variances, and an asymptotic covariance matrix of correlations are obtained (Cheung, 2015). In the second step, the structural equation model is specified on the basis of the aggregated correlation matrix (Cheung & Chan, 2005). All model parameters are estimated through weighted least squares estimation. This stage is key to the testing and comparing of models that represent different assumptions on the factor structure of constructs or the structural relations between variables (Cheung & Cheung, 2016).

3.2.2 Correcting correlations for unreliability. The measures of technology acceptance contain measurement error, as indicated by reliability coefficients of less than 1. Schmidt and Hunter (2014) consequently suggested correcting any correlation between two variables in a meta-analysis for unreliability by attenuation. If X and Y represent two technology acceptance variables, r_{XX} and r_{YY} their score reliabilities, and r_{XY} their correlation, then $\rho_{XY} = r_{XY}/\sqrt{r_{XX} \cdot r_{YY}}$ represents the corrected correlation. Although such corrections are generally recommended, they may not necessarily provide more accurate parameters of the

meta-analytic model (Michel, Viswesvaran, & Thomas, 2011). In the context of correlation-based MASEM, corrections for unreliability can produce correlation matrices that are not positive definite and thus reduce the sample of primary studies available for meta-analysis (Cheung, 2015). In the present study, we did not correct the correlations among the technology acceptance variables for unreliability in the main analyses, but conducted sensitivity analyses with the corrected correlations to examine the effects of attenuation.

3.2.3 Evaluating model fit. To evaluate the fit of the three factor models and the structural equation model linking technology acceptance, behavioral intention, and technology use, we examined the typical goodness-of-fit indices and referred to the common guidelines concerning their values. Specifically, we first evaluated the results of the chi-square test which compared the model-implied and the observed covariance matrices underlying a specific model—a significant test statistic indicates that these matrices differ, and thus the proposed model may not perfectly fit the data (Brown, 2015). This test, however, is sensitive to the sample size and was therefore supplemented by alternative indices (e.g., Wolf et al., 2013). These indices were as follows: Comparative Fit Index (CFI) ≥ .90 or .95, Root Mean Square Error of Approximation (RMSEA) ≤ .08 or .05, Standardized Root Mean Square Residual (SRMR) ≤ .10 or .08 for a reasonable or acceptable fit (e.g., Little, 2013; Marsh, Hau, & Grayson, 2004). For model comparisons, we performed chi-square difference testing and considered differences in the information criteria (Akaike's Information Criterion [AIC] and Bayesian Information Criterion [BIC]).

4. Results

4.1 Aggregation of Correlation Matrices

In the first step of the correlation-based MASEM approach, we aggregated the correlation matrices of the primary studies. This aggregation can be based either on the assumption of fixed or random effects in the correlations between the technology acceptance

variables. As a consequence, we tested which of the two assumptions, fixed or random effects, held for our data set. The fixed-effects model showed a poor fit to the meta-analytic data (χ^2 [1085] = 15297.0, $p < .001$, RMSEA = 0.212, CFI = 0.764, SRMR = 0.166, AIC = 13127.0, BIC = 3878.1) and was thus rejected. The random-effects model was statistically preferred over the fixed-effects model, as indicated by the significant test statistic of the homogeneity test, Q(1085) = 9245.1, $p < .001$. Overall, these findings suggested that the correlation matrices were heterogeneous, that is, correlations varied significantly between studies, and we therefore accepted the random-effects model as the basis for aggregating the correlation matrices from the primary studies. The resultant, aggregated correlation matrix, along with the between-study variance components, is shown in Table 1. All correlations were positive and statistically significant. Due to the small number of correlations available to describe the relation between USE and the three external variables (SN, TSE, and FC), the between-study variances were flagged as insignificant.

4.2 Meta-Analytic Confirmatory Factor Analysis (Research Question 1)

On the basis of the aggregated correlation matrix with random effects, we specified the three factor models depicted in Figure 2, examined their fit to the data, and compared them against each other. All relevant model parameters are shown in Table 2.

4.2.1 Model 1: One-factor model. The one-factor model of technology acceptance showed a very good fit to the data, $\chi^2(9) = 33.1$, $p < .001$, RMSEA = 0.009, CFI = 0.994, SRMR = 0.039, AIC = 15.1, BIC = -61.6. All factor loadings were positive and statistically significant, and ranged between $\lambda = 0.44$ (SN) and $\lambda = 0.77$ (ATT), with a median of $Mdn(\lambda) = 0.63$ (Table 2). These loadings and the corresponding residual variances resulted in an overall internal consistency of McDonald's $\omega = 0.79$. Overall, this model represented the data well, yet indicated some degree of heterogeneity between the technology acceptance variables due to the variation in factor loadings.

4.2.2 Model 2: Two-factor model. Differentiating the technology acceptance variables into two factors, namely general technology attitudes (indicated by PU, PEOU, ATT, and TSE) and external beliefs (indicated by SN and FC), resulted in a factor model that exhibited a very good fit to the data, $\chi^2(8) = 29.7$, $p < .001$, RMSEA = 0.009, CFI = 0.994, SRMR = 0.038, AIC = 13.7, BIC = -54.4. The factor loadings ranged between $\lambda = 0.48$ (SN) and $\lambda = 0.77$ (ATT), with a median of $Mdn(\lambda) = 0.63$, and the two technology acceptance factors were highly correlated, $\rho = .90$ (Table 2). This model represented another model that fitted the data.

4.2.3 Model 3: Three-factor model. Finally, we specified the three-factor model to the data and found that, although this model showed a very good fit ($\chi^2[6] = 23.4$, $p < .001$, RMSEA = 0.009, CFI = 0.995, SRMR = 0.032, AIC = 11.4, BIC = -39.7), one correlation was estimated to be larger than 1, $\rho = 1.13$ (between the technology perceptions and the attitudes and self-beliefs factors). This so-called 'Heywood case' was most likely caused by the high correlations among all three factors of technology acceptance (see also Dillon, Kumar, & Mulani, 1987). After exploring the effects of certain model modifications on the estimation of the problematic factor correlation (e.g., by introducing equality constraints to the loadings of different factors), we addressed this issue by constraining the correlation to 0.999—a value close to its upper boundary (Brown, 2015). The resultant, refined model showed a very good fit to the data, ($\chi^2[7] = 28.6$, $p < .001$, RMSEA = 0.009, CFI = 0.994, SRMR = 0.038, AIC = 14.6, BIC = -45.1), with a significant yet marginal loss in goodness-of-fit after introducing the constraint ($\Delta\chi^2[1] = 5.2$, $p = .02$, ΔRMSEA = 0.000, ΔCFI = -0.001, ΔSRMR = +0.006, ΔAIC = +3.2, ΔBIC = -5.4). Nonetheless, we accepted the three-factor model with the factor correlation constraint in order to have a well-specified measurement model that can be compared with Models 1 and 2. This model further revealed high correlations between the

external beliefs factor and the attitudes and beliefs factor ($\rho = 0.85$), as well as the external beliefs factor and the technology perceptions factor ($\rho = 0.92$; Table 2).

4.2.4 Model comparisons. Conducting chi-square difference testing, we compared these three factor models against each other. First, we compared the one-factor model with the two- and three factor model and found that neither the differentiation between two technology acceptance factors ($\Delta\chi^2[1] = 3.3$, $p = .07$) nor the differentiation into three factors ($\Delta\chi^2[2] = 4.5$, $p = .11$) improved the model fit significantly. Second, comparing the two- and three-factor models showed a similar result, $\Delta\chi^2(1) = 1.2$, $p = .28$. Considering the high correlations among the technology acceptance factors, the occurrence of a Heywood case in the three-factor model, and the results of the model comparisons, we conclude that the one-factor model represents the meta-analytic data best.

4.2.5 Sensitivity Analyses. To challenge our findings, we conducted two types of sensitivity analyses: First, we replicated our analyses using attenuated correlations among all variables. Second, we examined the factor structure using exploratory factor analysis.

Corrected correlations. After testing the attenuated correlation matrices for positive definiteness, we identified 19 matrices that did not fulfill this criterion—these matrices were not submitted to the meta-analytic structural equation modeling. The aggregated correlation matrix under the random-effects model formed the basis for testing the three factor models. Factor model 1 showed a very good fit to the data ($\chi^2[9] = 30.4$, $p < .001$, RMSEA = 0.008, CFI = 0.994, SRMR = 0.040, AIC = 12.4, BIC = -64.4), with factor loadings ranging from $\lambda = 0.43$ (SN) to $\lambda = 0.79$ (ATT). The two-factor model showed a very good fit as well, $\chi^2(8) = 26.9$, $p < .001$, RMSEA = 0.008, CFI = 0.995, SRMR = 0.039, AIC = 10.9, BIC = -57.3. The resultant correlation between teachers' general attitudes toward technology and their external beliefs was high, $\rho = .89$. Nonetheless, there was no evidence that this model outperformed the one-factor model, $\Delta\chi^2(1) = 3.4$, $p = .06$. Finally, the three-factor model had a very good

fit, $\chi^2(7) = 25.6$, $p < .001$, RMSEA = 0.008, CFI = 0.995, SRMR = 0.038, AIC = 11.6, BIC = -48.1. This model did not improve the fit in comparisons to models 1 ($\Delta\chi^2[1] = 4.8$, $p = .09$) and 2 ($\Delta\chi^2[1] = 1.4$, $p = .24$). Overall, the reanalysis of the attenuated correlation matrices yielded similar results, and we essentially arrived at the same conclusions drawn from the analyses of the uncorrected correlation matrices.

Exploratory factor analysis. We further submitted the aggregated correlation matrix to an exploratory factor analysis within the oblique GEOMIN rotation in the software M*plus* 7.3 (Muthén & Muthén, 1998-2015). The resultant eigenvalues were 2.91, 0.80, 0.75, 0.65, 0.48, and 0.41, and the corresponding Empirical Kaiser criteria were 1.03 for the first eigenvalues and 1 for all others (for more details on the Empirical Kaiser criterion, please refer to Braeken & van Assen, 2018). The exploratory factor analyses with three factors did not converge; however, a two-factor solution could be retained. This solution did not result in a clear factor loading pattern, as the variables TSE and FC, for instance, could not be clearly assigned to one of the two factors. Overall, the eigenvalues and the unclear assignment of some variables in the two-factor model supported our decision for the one-factor model as a better representation of the data.

4.2.6 Subgroup Analyses. To further substantiate the evidence base, we replicated all confirmatory factor analyses, including the model comparisons, for specific subgroups of primary studies. First, we differentiated between studies involving in-service teachers (N = 17533, k = 319, m = 61) and pre-service teachers (N = 19678, k = 359, m = 67). Similar to the full sample of primary studies, there was no evidence supporting the preference of either the two- or the three-factor model of technology acceptance (see Table 3). In fact, the one-factor model was preferred over these two models for both groups of teacher samples. Second, we differentiated between studies in which the technology acceptance measures referred to technology in general (N = 19027, k = 383, m = 71) and specific technologies (N = 18184, k =

295, *m* = 57). For primary studies that referred to specific technologies, the one-factor model was again preferred over the alternative models (Table 3). However, the model comparisons indicated that both the two- and the three-factor models was superior to the one-factor model for samples with a reference to technology in general, as indicated by the significant chi-square difference test statistics. Although this finding may suggest some multidimensionality in the data, the factor correlations in these two models were high (Model 2: $\rho = .85$; Model 3: ρs = .84-.99)—hence, these factors were practically indistinguishable. Overall, the subgroup analyses supported the preference of the one-factor model of technology acceptance and thus provided additional evidence in the crafting of a validity argument.

4.3 Meta-Analytic Structural Equation Modeling (Research Question 2)

Having establish an appropriate measurement model of the technology acceptance variables, we added the two outcome variables, behavioral intention and technology use, to the one-factor model and estimated the direct and indirect effects of technology acceptance on these two outcomes (see Figure 1). Although it has been established in previous studies and even meta-analyses that technology acceptance may not only indirectly relate to technology use via behavioral intention but also directly (Scherer et al., 2019), we tested whether this finding held for our meta-analytic sample. The structural equation model without the direct effect of technology acceptance on technology use exhibited a good fit to the data, $\chi^2(20) = 100.9$, $p < .001$, RMSEA = 0.010, CFI = 0.987, SRMR = 0.063, AIC = 60.9, BIC = -109.6. This model explained about 37.4 % of the variance in USE and 49.6 % in BI, and the indirect effect of technology acceptance on technology use via behavioral intention was statistically significant, $b = 0.43$, 95 % LBCI [0.39, 0.47]. Behavioral intentions and technology use were also significantly related, $b = 0.61$, 95 % LBCI [0.55, 0.67]. Adding the proposed direct effect to the model yielded a structural equation model with a very good fit to the data, $\chi^2(19) = 55.9$, $p < .001$, RMSEA = 0.007, CFI = 0.994, SRMR = 0.038, AIC = 17.9, BIC = -144.1. In

fact, this model outperformed the model without the direct effect ($\Delta\chi^2[1] = 45.0$, $p < .001$), testifying to the importance of this effect. We consequently accepted the model with the direct effect as the better representation of the data. The resultant model parameters are shown in Figure 3.

Overall, the final model indicated positive and significant relations of teachers' technology acceptance with behavioral intentions and technology use. However, due to the strong effect on technology use, both the link between BI and USE and the indirect effect were no longer significant (see Figure 1). Despite this observation, the hypothesized effects of technology acceptance on the outcome variables could be established.

5. Discussion

5.1 Summary of Key Findings

The present study was aimed at examining meta-analytically the evidence that may support the crafting of a validity argument for the existing technology acceptance measures. Specifically, we first analyzed the factor structure of these measures and found that a one-factor model represented the data best. This finding was robust against the correction of correlations for unreliability, differentiating between subgroups of studies (i.e., teacher samples and types of technology), and the method of factor analysis (i.e., confirmatory vs. exploratory factor analysis). Second, we analyzed the relations between the technology acceptance factor and two outcome variables, namely behavioral intentions and technology use. Performing structural equation modeling, we found positive, moderate, and statistically significant relations to technology acceptance, yet no support for the hypothesized cascade of effects, Technology acceptance → Behavioral intention → Technology use.

5.2 Validity Evidence for the Measurement of Technology Acceptance

Crafting a validity argument for the measurement of educationally relevant constructs is considered key to any inference drawn from the resultant scores (Kane, 2013). The present

study was concerned with the evidence for the validity of the technology acceptance measures as it brought together information about the dimensionality of the technology acceptance measurement and its relations to relevant outcome variables. These two sources of information are in fact critical to the crafting of a validity argument (American Educational Research Association, American Psychological Association, & National Council on Measurement in Education, 2014). Consequently, our study contributes to the field of research with knowledge about the validity of technology acceptance measures, supporting the continued use of technology acceptance models to inform policy and practice. In fact, reliable knowledge about pre- and in-service teachers' technology acceptance and use is considered important for constructing targeted and relevant teacher development courses and strategies (Tondeur, Pareja Roblin, van Braak, Fisser, & Voogt, 2013). In addition, our study showcases how novel approaches within meta-analysis, that is, meta-analytic structural equation modeling, can be utilized to obtain validity evidence across these (i.e., on the construct level and not the item level which is the widely taken approach in primary studies).

The finding that technology acceptance could be represented by a single latent variable has several interpretations: First, the technology acceptance measures are substantially intercorrelated (Nistor, 2014) and indeed measure a common trait which could be interpreted as technology acceptance. Second, the commonalities between the technology acceptance variables can be interpreted from both a substantive and a methodological perspective. Some of these variables have similar conceptualizations and are assessed with similar items (e.g., PEOU and TSE). These similarities ultimately bring to attention the question whether they in fact represent different sub-constructs of technology acceptance (e.g., Scherer, Siddiq, & Teo, 2015). Concerning the methods of assessment, the included studies exclusively contained self-report measures. The commonalities between the technology acceptance variables may therefore be due to common method (co-)variance.

Sharma et al. (2009) even claimed that much of the covariation between the variables might be due to the use of a single assessment method. The knowledge about the factor structure of the technology acceptance measurement does, however, not yet provide any evidence on whether the resultant factor indeed represents the technology acceptance construct—it may well be that it represents a simple method factor underlying all subscales. Hence, it is critical to the study of technology acceptance to move beyond the exploration of factor structures and consider further sources of evidence.

Third, along the lines of the previous points, we argue that the investigation of the factor structure, possible interpretations thereof, and its generalizability across subgroups of teachers or studies are keys to the understanding how technology acceptance measures operate. The knowledge gained from these aspects is much needed, especially for interpreting any relation between technology acceptance and other variables. As the technology acceptance variables are substantially intercorrelated, relations to other variables may be interpreted erroneously due to the issue of multicollinearity. Nevertheless, the finding that the technology acceptance variables can be aggregated to a common factor provides an approach to circumvent this issue and to draw valid inferences from the data (Scherer et al., 2018) and supports the continued use of the technology acceptance model for capturing this trait within education.

Fourth, we notice that our study was not concerned with validating specific items or assessment formats of technology acceptance (*item level*); in contrast, our study was concerned with the representation of technology acceptance as a construct that is measured by several subscales (*subscale level*). Drawing from the principles of confirmatory factor analysis, any factor identified based on manifest subscale scores could be interpreted as a second-order factor (Brown, 2015). Whereas the notion of a second-order factor is well-known to, for instance, the disciplines of cognitive psychology (Gustafsson, 1984) and

personality psychology (Digman, 1997), it has hardly been considered in educational technology in general (Scherer et al., 2018) and as a vehicle to represent technology acceptance in particular (Sharma et al., 2009). Meta-analyzing correlations and correlations matrices provides a powerful tool to examine the factor structure of measures and to understand the nature of constructs (Cho, 2015; Hong & Cheung, 2015), as the following two examples illustrate: Ackerman, Beier, and Boyle (2005) studies the relation between working memory and intelligence extracting correlations among several subscales that measured the two constructs from 86 samples. Using meta-analytic procedures to combine correlations and performing confirmatory factor analysis, the authors found evidence for a second-order factor representing both cognitive skills. Naragon-Gainey, McMahon, and Chacko (2017) explored the structure of common emotion regulation strategies based on correlations from 331 samples. They found that three factors represented the structure of the data best—these factors suggested a specific grouping of strategies that informed the understanding of emotion regulation. Both example studies made use of correlations among subscales and testified to the existence of higher-order factors. Similar to these studies, our findings testify to the existence of a second-order factor of technology acceptance which captures the covariation between the measures and therefore suggest that the seemingly different measures are, to a substantial extent, similar. From a measurement perspective, this finding raises the question whether a set of several scales comprising the technology acceptance measures is in fact needed to represent the construct. The answer to this question may have direct implications for future studies of technology acceptance, in which assessments of the constructs are included. Similar to this discussion, researchers in the field of cognitive psychology obtained evidence for a hierarchical structure of cognitive abilities and thus argued that, in order to represent a person's cognitive ability, only a selection of assessments, yet not a lengthy battery assessing the full range of sub-abilities would be needed (McGrew, 2009). For the

assessment of technology acceptance as a construct, selecting the best indicators could be guided by the size of the factor loadings: some of the measures showed higher factor loadings (ATT and PU) than others (FC and SN). In light of these findings, it seems as if the external factors of technology acceptance (Abdullah & Ward, 2016) are less indicative of the overall technology acceptance construct (see also Teo, 2018). To substantiate this finding further, we encourage researchers in the field of educational technology to explore this hierarchy of technology acceptance measures in greater detail, for instance, through the usage of multi-sample and multi-method assessments (e.g., Teo, 2015). Ultimately, the insights gained from this line of research may lead to a reduced set of items needed to measure technology acceptance.

We supplemented the investigation of the factor structure by examining the relations between technology acceptance, represented by a single latent variable, behavioral intentions, and technology use. These relations had been well-described in technology acceptance models; yet, the indicators of technology acceptance were hypothesized to show several structural relations (see Figure 4a). As noted earlier, the existing body of research diverges with respect to these structural relations. Hence, the diversity in these structural relations compromises the validity of the technology acceptance construct representation (Scherer et al., 2019). The findings of our meta-analysis address this validity threat by proposing to consider a unidimensional representation of the construct (see Figure 4b).

As for the findings on the factor structure, we interpret the findings on the relations in several ways. To illustrate, the relations identified in our meta-analysis confirm that technology acceptance can explain significant variation in the two outcome variables. This observation can be considered further evidence for the validity of the measurement. Moreover, despite common expectations, we did not find evidence for the proposed cascade of relations (see Figure 1). Technology acceptance was directly, yet not indirectly related to

BI and USE. This finding challenges the assumptions on the mechanisms of how technology acceptance operates and how BI and USE are linked. Together with Nistor (2014), we argue that the BI-USE link, which was insignificant in our meta-analysis, may not be positive and significant at all—perhaps it is time to abandon the underlying assumptions. This implies that researchers may need to supplement their studies that are solely based on surveys with other information on teachers' actual use of technology (e.g., learning analytics, log file data). Moreover, the simplistic view of the hypothesized cascade does not take into account the complexities of turning intentions into actual behavior (Bagozzi, 2007). We therefore encourage researchers to further explore these complexities along with possible moderators of the BI-USE link and to retrieve information about possible causes that weaken this link (Montes de Oca & Nistor, 2014). Furthermore, a comprehensive TAM instrument that integrates types of technology acceptance in the context of education can be a next important step in order to measure the differential impact on specific types of technology acceptance. Most primary studies assessed the use of technology via self-reports and only obtained proxies of teachers' actual technology integration. This, however, threatens the validity of this outcome measure and calls for including alternative sources of information about the USE variable (e.g., classroom observations, log file data). Overall, we argue that analyzing the relations among technology acceptance, behavioral intentions, and technology use provided further evidence for the validity of the technology acceptance measurement. At the same time, some findings revealed the perhaps outdated assumptions on these relations.

5.3 Limitations and Future Directions

This study set out with the goal to examine whether the close relations between the variables relevant to teachers' technology acceptance may require researchers to rethink the structure of current technology acceptance models. Although the finding that the technology acceptance variables are indeed closely related and thus hardly distinct empirically may

explain the diversity of results in existing studies (e.g., weak to strong links between technology acceptance, behavioral intentions, and technology use; differential prediction of perceived usefulness and ease of use by external variables), other factors may explain this diversity as well. For instance, Nistor (2014) argues that certain relations in the TAM are moderated by contextual factors and norm-related beliefs. We encourage researchers to consider the moderating effects of such contextual variables when explaining the between-study variation in relations. Next, from a methodological perspective, correlation-based MASEM—a method that overcomes several challenges associated with the pooling of multiple correlations from the primary studies—still has shortcomings, especially concerning quantifying the between-study variation of parameters in the structural equation model. To become more accurate in the explanation of this variation, novel methodological approaches, including multilevel MASEM, may be feasible alternatives; however, these approaches still have to deliver on their promises (Cheung, 2018; Ke, Zhang, & Tong, 2018). Finally, our meta-analysis focused on samples of teachers, probably the most prominent group to be studied in the context of technology acceptance in education (Scherer et al., 2019). This focus restricts our inferences to pre- and in-service teachers, and we would like to encourage replications and extensions of our meta-analysis to student samples and samples outside of educational contexts. The resultant knowledge may provide insights into the generalizability of our results across samples and contexts.

5.4 Implications

To summarize, our analysis of the existing meta-analytic data set of teachers' technology acceptance measures has substantive, methodological, and practical implications.

5.4.1 Theoretical Implications

Our study sheds light on the link between teachers' intentions to use technology in educational settings and their reported use and thus directly responds to Nistor's (2014) call

for examining this link. The finding that usage intentions and reported usage behavior were *not* linked in our study implies that (a) this link is clearly not as solid as anticipated in previous literature, therefore possible reasons for this missing link should be explored in future research; (b) teacher education or professional development programs should not stop at facilitating and fostering teachers' intentions to use technology but follow up on the actual implementation in classrooms and decrease possible barriers of technology usage.

Next, the finding that technology acceptance is directly related to usage intentions and reported usage behavior implies not only the relevance of the construct of technology acceptance but also to the relevance of what is shared among all its indicators for technology integration. The latter defines the construct as a latent variable (for a general note on this issue, please refer to Borsboom, Mellenbergh, & van Heerden, 2003). Besides, informing schools and educational policy-makers about the relevance of factors determining the adoption of technology is critical to the implementation of technologies in classrooms, schools, and educational systems, especially when teachers have large degrees of autonomy with respect to technology integration in classrooms (Fraillon, Ainley, Schulz, Friedman, & Gebhardt, 2014; Siddiq et al., 2016).

Finally, our study relied on an existing meta-analytic data set and explored an alternative explanation for the seemingly conflicting findings surrounding the relations among the technology acceptance variables. In this sense, we contributed to extending the existing meta-analysis and to clarifying some of the previous findings. For instance, Scherer et al. (2019) noted the considerable between-study variation of correlations among technology acceptance variables—an indicator of what we referred to as "conflicting findings"—and they explored whether study- and sample-level characteristics could explain this variation. However, as the variance explanation were considerably small in their study, the proposed characteristics did not have strong explanatory power of the varying findings (see also

Scherer & Teo, 2019). Relying on this observation, we proposed another possible explanation, that of the dimensionality of the technology acceptance construct. We found evidence supporting this explanation by further analyzing their data set. This process of replicating or, more precisely, reiterating research approaches and considering alternative hypotheses is at the heart of science and has found its way into the current debates of educational and psychological research (Hedges & Schauer, 2018; Makel & Plucker, 2014).

Overall, we argue that reconsidering the representation of the technology acceptance construct is critical to the inferences draw from the empirical tests of complex, structural models, such as the Technology Acceptance Model and its versions. As Lim (2018) suggested, reconsidering the conceptualization of technology acceptance as a construct or a "conceptual lens […] for behavioural modelling in technology-mediated environments" through new forms of replication is needed to advance technology acceptance research. Our re-analysis of a meta-analytic data set offers such a replication by extending existing insights and answers Lim's (2018) call. More generally, considering Makel's and Plucker's (2014) and Hodges' (2015) plea for replications in education technology research, we believe that crafting a validity argument for this construct is as important as striving for novelty in this area. The reason for this is that building on false theoretical assumptions may lead to erroneous conclusions and further ineffective interventions.

5.4.2 Methodological Implications

Our study provided new insights into the ways to represent the technology acceptance construct in future studies. Specifically, we observed that a single factor underlies the key indicators of technology acceptance (i.e., PU, PEOU, ATT) alongside the external variables (i.e., SN, TSE, and FC). This observation informs (a) the way the technology acceptance construct can be represented as a latent variable indicated by six manifest variables in structural equation models, and (b) the interpretation of the results obtained from empirical

studies of technology acceptance models. Concerning the latter (b), our findings warrant investigating the factor structure of technology acceptance *before* the six variables (i.e., PU, PEOU, ATT, SN, TSE, and FC) are submitted to path or structural equation modeling. In case their correlations are substantially high, the resultant path coefficients will be biased due to the issue of multicollinearity Marsh et al. (2004) warned against. This bias can lead to erroneous conclusions drawn from the structural models (Scherer et al., 2018). Hence, the findings from our study have direct implications for research on technology acceptance as it informs the way how the construct can be represented and how researchers can ensure the validity of their findings. In conclusion, our study offers a way to circumvent the issue of multicollinearity that can compromise the crafting of a validity argument (Borsboom, Mellenbergh, & van Heerden, 2004).

Besides, our study showcased how researchers in the field of technology acceptance can utilize correlation-based MASEM to synthesize research findings across studies. The potential of this approach lies in the correct aggregation of multiple correlations and the flexible specification of multiple structural equation models (Cheung, 2015)—in our case, these models represented multiple assumptions on the structure of technology acceptance (e.g., unidimensional vs. two-dimensional). The modeling steps taken in our study were based on the standards for MASEM (Sheng et al., 2016) and can be transferred to other scenarios. We therefore hope to stimulate meta-analysts to consider performing MASEM instead of the biased univariate approaches when synthesizing correlation matrices.

5.4.3 Managerial Implications

Despite the fact that our meta-analysis mainly has direct implications for theory-building and empirical research in the context of technology acceptance, it may have some practical implications for teacher education and professional development. As stated before, teachers have a large degree of autonomy to select specific technological applications (e.g.,

Vangrieken et al., 2017), but at the same time it is still challenging for teachers to adequately integrate them in their educational practice (Pynoo et al., 2011). Moreover, because of the fast development of ICT, teachers constantly need to update their educational technology use. The overall finding of the current study that technology acceptance explains variance in both the teachers' usage intentions and the reported usage offers some directions for interventions in schools: fostering the different aspects of technology acceptance could probably enhance teachers' usage-relevant outcomes. The finding that technology acceptance is represented as a unidimensional construct further supports the argument to develop interventions that do not only focus on one aspect of it (e.g., supporting only teachers' technology self-efficacy) but multiple (Scherer et al., 2019). Moreover, the missing link between usage intentions and usage calls for developing educational and training programs for teachers that focus explicitly on the transfer from intention to practice (Nistor, 2014). To illustrate, this unidimensional construct to measure the effect on teachers' usage intentions can provide more insight to organizational professional development initiatives that take place before the introduction of new technologies in education. Such programs may include approaches to help seeking, knowledge sharing, and peer support among teachers to support usage intentions (e.g., Montes de Oca & Nistor, 2014; Venkatesh & Bala, 2008).

6. Conclusions

The seemingly diverse measures of technology acceptance—measures that tap teachers' attitudes, beliefs, and their perceptions of norms and facilitating conditions alike—represent a common trait that can be interpreted as an indicator of the technology acceptance construct. This homogeneity among the measures, although not perfect, provides some evidence for the validity of the technology acceptance measurement. Moreover, the robustness of this finding across several conditions (e.g., subgroups within the sample, treatment of correlations, psychometric approaches) strengthens this evidence base. At the

same time, the fact that technology acceptance can be represented as a second-order trait questions the empirical distinction between the first-order indicators. Specifically, the indicators measuring the technology acceptance construct are substantially intercorrelated, and their use in well-established technology acceptance models that propose certain structural relations among them may be problematic—in fact, some of the diverse findings on the relations between technology acceptance and outcome variables may be due to the substantial relations among the technology acceptance measures.

We consequently encourage researchers in the field not to take for granted the distinction between technology acceptance measures, but to examine the structure of these measures in their studies, and, ultimately, to consider representing the technology acceptance construct as a second-order trait. Together with Bagozzi (2007) and Nistor (2014), we also argue that the unchallenged assumption of a positive and significant link between the intentions to use technology and the use of it must be challenged, examined, and perhaps even abandoned. We believe that there is a need for explaining the lack of this link by bringing together psychological and contextual perspectives on technology acceptance. Crafting a validity argument for the measurement of technology acceptance should become part of the standard repertoire of any study in this area.

Next to these substantive conclusions, the present study has also demonstrated how meta-analytic structural equation modeling—one of the recent advancements in meta-analysis—allows researchers to test hypotheses on measurement and structural models based on the correlation matrices that were obtained from primary studies. This opens new possibilities to advance the knowledge in the field of educational technology through research syntheses.

References

References marked with an asterisk indicate studies included in the meta-analysis.

Abdullah, F., & Ward, R. (2016). Developing a General Extended Technology Acceptance Model for E-Learning (GETAMEL) by analysing commonly used external factors. *Computers in Human Behavior, 56*, 238-256. https://doi.org/10.1016/j.chb.2015.11.036

Ackerman, P. L., Beier, M. E., & Boyle, M. O. (2005). Working Memory and Intelligence: The Same or Different Constructs? *Psychological Bulletin, 131*(1), 30-60. https://doi.org/10.1037/0033-2909.131.1.30

American Educational Research Association (AERA), American Psychological Association (APA), & National Council on Measurement in Education (NCME). (2014). *Standards for Educational and Psychological Testing*. Washington, DC: AERA.

Al-Emran, M., Mezhuyev, V., & Kamaludin, A. (2018). Technology acceptance model in M-learning context: A systematic review. *Computers & Education, 125*, 389-412. https://doi.org/10.1016/j.compedu.2018.06.008

Archer, K., Savage, R., Sanghera-Sidhu, S., Wood, E., Gottardo, A., & Chen, V. (2014). Examining the effectiveness of technology use in classrooms: A tertiary meta-analysis. *Computers & Education, 78*, 140-149. https://doi.org/10.1016/j.compedu.2014.06.001

Bagozzi, R. P. (2007). The legacy of the Technology Acceptance Model and a proposal for a paradigm shift. *Journal of the Association for Information Systems, 8*(4), 244-254. Retrieved from https://aisel.aisnet.org/jais/vol8/iss4/12

Borsboom, D., Mellenbergh, G. J., & van Heerden, J. (2003). The theoretical status of latent variables. *Psychological Review, 110*(2), 203-219. http://dx.doi.org/10.1037/0033-295X.110.2.203

Borsboom, D., Mellenbergh, G. J., & van Heerden, J. (2004). The Concept of Validity. *Psychological Review, 111*(4), 1061-1071. https://doi.org/10.1037/0033-295X.111.4.1061

Braeken, J., & van Assen, M. A. L. M. (2017). An empirical Kaiser criterion. Psychological *Methods, 22*(3), 450-466. http://dx.doi.org/10.1037/met0000074

Brown, T. A. (2015). *Confirmatory factor analysis for applied research* (2nd ed.). New York, NY: The Guilford Press.

Chauhan, S. (2017). A meta-analysis of the impact of technology on learning effectiveness of elementary students. *Computers & Education, 105*, 14-30. https://doi.org/10.1016/j.compedu.2016.11.005

Cheung, M. W.-L. (2015). *Meta-Analysis: A Structural Equation Modeling Approach*. Chichester, West Sussex: John Wiley & Sons, Ltd.

Cheung, M. W.-L., & Chan, W. (2005). Meta-Analytic Structural Equation Modeling: A Two-Stage Approach. *Psychological Methods, 10*(1), 40-64. https://doi.org/10.1037/1082-989X.10.1.40

Cheung, M. W.-L., & Cheung, S. F. (2016). Random-Effects Models for Meta-Analytic Structural Equation Modeling: Review, Issues, and Illustrations. *Research Synthesis Methods, 7*(2), 140-155. https://doi.org/10.1002/jrsm.1166

Cho, K. (2015). *Meta-Analysis of Factor Analyses: Comparison of Univariate and Multivariate Approaches Using Correlation Matrices and Factor Loadings*. Doctoral Dissertation, Florida State University, Tallahassee, Florida. Retrieved from https://diginole.lib.fsu.edu/islandora/object/fsu:253212/datastream/PDF/download/citation.pdf (accessed 10 December 2018)

Davis, F. D. (1985). *A technology acceptance model for empirically testing new end-user information systems: Theory and results.* (PhD), Massachusetts Institute of

Technology, Cambridge, MA. Retrieved from https://dspace.mit.edu/bitstream/handle/1721.1/15192/14927137-MIT.pdf?sequence=2

Davis, F. D. (1989). Perceived Usefulness, Perceived Ease of Use, and User Acceptance of Information Technology. *MIS Quarterly, 13*(3), 319-340. https://doi.org/10.2307/249008

Digman, J. M. (1997). Higher-order factors of the Big Five. *Journal of Personality and Social Psychology, 73*(6), 1246-1256. http://dx.doi.org/10.1037/0022-3514.73.6.1246

Dillon, W. R., Kumar, A., & Mulani, N. (1987). Offending estimates in covariance structure analysis: Comments on the causes of and solutions to Heywood cases. *Psychological Bulletin, 101*(1), 126-135. http://dx.doi.org/10.1037/0033-2909.101.1.126

Farrar, D. E., & Glauber, R. R. (1967). Multicollinearity in regression analysis: The problem revisited. *The Review of Economics and Statistics, 49*(1), 92-107. https://www.jstor.org/stable/1937887

Fishbein, M., & Ajzen, I. (1975). *Belief, attitude, intention, and behavior: An introduction to theory and research*. Reading, MA: Addison-Wesley.

Fraillon, J., Ainley, J., Schulz,W., Friedman, T., & Gebhardt, E. (2014). *Preparing for life in a digital age: The IEA International Computer and Information Literacy Study International Report*. Cham: Springer. https://doi.org/10.1007/978-3-319-14222-7

Gewin, V. (2016). Data sharing: An open mind on open data. *Nature, 529*, 117-119. https://doi.org/10.1038/nj7584-117a

Gustafsson, J.-E. (1984). A unifying model for the structure of intellectual abilities. *Intelligence, 8*(3), 179-203. https://doi.org/10.1016/0160-2896(84)90008-4

Hedges, L. V., & Schauer, J. M. (2018). Statistical Analyses for Studying Replication: Meta-Analytic Perspectives. Psychological Methods, http://dx.doi.org/10.1037/met0000189

Hodges, C. B. (2015). Replication studies in educational technology. *TechTrends, 59*(4), 3-4. https://doi.org/10.1007/s11528-015-0862-2

Holden, R. J., & Karsh, B.-T. (2010). The Technology Acceptance Model: Its past and its future in health care. *Journal of Biomedical Informatics, 43*, 159-172. https://doi.org/10.1016/j.jbi.2009.07.002

Hong, C., & Walker, D. A. (2015). A confirmatory factor analysis of the Technology Acceptance Model. *General Linear Model Journal, 41*(2), 22-29. Retrieved from http://www.glmj.org/archives/articles/Hong_v41n2.pdf

Hong, R. Y., & Cheung, M. W.-L. (2015). The Structure of Cognitive Vulnerabilities to Depression and Anxiety: Evidence for a Common Core Etiologic Process Based on a Meta-Analytic Review. *Clinical Psychological Science, 3*(6), 892-912. https://doi.org/10.1177/2167702614553789

Hsiao, C. H., & Yang, C. (2011). The intellectual development of the technology acceptance model: A co-citation analysis. *International Journal of Information Management, 31*(2), 128-136. https://doi.org/10.1016/j.ijinfomgt.2010.07.003

Huh, H. J., Kim, T., & Law, R. (2009). A comparison of competing theoretical models for understanding acceptance behavior of information systems in upscale hotels. *International Journal of Hospitality Management, 28*, 121-134. https://doi.org/10.1016/j.ijhm.2008.06.004

Jones, C. M., McCarthy, R. V., Halawi, L., & Mujtaba, B. (2010). Utilizing the Technology Acceptance Model to Assess the Employee Adoption of Information Systems Security Measures. *Issues in Information Systems, 11*(1). Retrieved from https://commons.erau.edu/publication/310

Kane, M. T. (2013). Validating the interpretations and uses of test scores. *Journal of Educational Measurement, 50*(1), 1-73. https://doi.org/10.1111/jedm.12000

Ke, Z., Zhang, Q., & Tong, X. (2018). Bayesian Meta-Analytic SEM: A One-Stage Approach to Modeling Between-Studies Heterogeneity in Structural Parameters. *Structural Equation Modeling: A Multidisciplinary Journal*, https://doi.org/10.1080/10705511.2018.1530059

King, W. R., & He, J. (2006). A meta-analysis of the technology acceptance model. *Information & Management, 43*(6), 740-755. https://doi.org/10.1016/j.im.2006.05.003

Lawless, K. A., & Pellegrino, J. W. (2007). Professional Development in Integrating Technology Into Teaching and Learning: Knowns, Unknowns, and Ways to Pursue Better Questions and Answers. *Review of Educational Research, 77*(4), 575-614. https://doi.org/10.3102/0034654307309921

Lim, W. M. (2018). Dialectic antidotes to critics of the technology acceptance model: Conceptual, methodological, and replication treatments for behavioural modelling in technology-mediated environments. *Australasian Journal of Information Systems, 22*, 1-11. http://dx.doi.org/10.3127/ajis.v22i0.1651

Little, T. D. (2013). *Longitudinal Structural Equation Modeling*. New York, NY: Guilford Press.

*Luan, W. S., & Teo, T. (2011). Student Teachers' Acceptance of Computer Technology. In T. Teo (Ed.), *Technology Acceptance in Education: Research and Issues* (pp. 43-61). Rotterdam: Sense Publishers.

Makel, M. C., & Plucker, J. A. (2014). Facts are more important than novelty: Replication in the education sciences. *Educational Researcher, 43*(6), 304-316. https://doi.org/10.3102%2F0013189X14545513

Marangunić, N., & Granić, A. (2015). Technology acceptance model: a literature review from 1986 to 2013. *Universal Access in the Information Society, 14*(1), 81-95. https://doi.org/10.1007/s10209-014-0348-1

Marsh, H. W., Dowson, M., Pietsch, J., & Walker, R. (2004). Why Multicollinearity Matters: A Reexamination of Relations Between Self-Efficacy, Self-Concept, and Achievement. *Journal of Educational Psychology, 96*(3), 518-522. https://doi.org/10.1037/0022-0663.96.3.518

Marsh, H. W., Hau, K.-T., & Grayson, D. (2005). Goodness of fit evaluation in structural equation modeling. In A. Maydeu-Olivares & J. J. McArdle (Eds.), *Contemporary Psychometrics* (vol. 275-340). Mahwah, NJ: Lawrence Erlbaum.

McGrew, K. S. (2009). CHC theory and the human cognitive abilities project: Standing on the shoulders of the giants of psychometric intelligence research. *Intelligence, 37*(1), 1-10. https://doi.org/10.1016/j.intell.2008.08.004

Michel, J. S., Viswesvaran, C., & Thomas, J. (2011). Conclusions from meta-analytic structural equation models generally do not change due to corrections for study artifacts. *Research Synthesis Methods, 2*(3), 174-187. https://doi.org/10.1002/jrsm.47

Montes de Oca, A. M., & Nistor, N. (2014). Non-significant intention–behavior effects in educational technology acceptance: A case of competing cognitive scripts? *Computers in Human Behavior, 34*, 333-338. http://dx.doi.org/10.1016/j.chb.2014.01.026

Naragon-Gainey, K., McMahon, T. P., & Chacko, T. P. (2017). The structure of common emotion regulation strategies: A meta-analytic examination. *Psychological Bulletin, 143*(4), 384-427. https://doi.org/10.1037/bul0000093

Nistor, N. (2014). When technology acceptance models won't work: Non-significant intention-behavior effects. *Computers in Human Behavior, 34*(Supplement C), 299-300. https://doi.org/10.1016/j.chb.2014.02.052

Nistor, N., & Heymann, J. O. (2010). Reconsidering the role of attitude in the TAM: An answer to Teo (2009). *British Journal of Educational Technology, 41*(6), E142-E145. https://doi.org/10.1111/j.1467-8535.2010.01109.x

Open Science Collaboration (2015). Estimating the reproducibility of psychological science. *Science, 349*(6251), 943-952. https://doi.org/10.1126/science.aac4716

Price, L. K. (2017). *Psychometric Methods: From Theory To Practice*. New York, NY: The Guilford Press.

Pynoo, B., Devolder, P., Tondeur, J., Van Braak, J., Duyck, W., & Duyck, P. (2011). Predicting secondary school teachers' acceptance and use of a digital learning environment: A cross-sectional study. *Computers in Human Behavior, 27*(1), 568-575. https://doi.org/10.1016/j.chb.2010.10.005

Ritter, N. L. (2017). Technology Acceptance Model of Online Learning Management Systems in Higher Education: A Meta-Analytic Structural Equation Model. *International Journal of Learning Management Systems, 5*(1), 1-15. http://dx.doi.org/10.18576/ijlms/050101

Schepers, J., & Wetzels, M. (2007). A meta-analysis of the technology acceptance model: Investigating subjective norm and moderation effects. *Information & Management, 44*(1), 90-103. https://doi.org/10.1016/j.im.2006.10.007

Scherer, R., Siddiq, F., & Teo, T. (2015). Becoming more specific: Measuring and modeling teachers' perceived usefulness of ICT in the context of teaching and learning. *Computers & Education, 88*, 202-214. https://doi.org/10.1016/j.compedu.2015.05.005

Scherer, R., Siddiq, F., & Tondeur, J. (2019). The technology acceptance model (TAM): A meta-analytic structural equation modeling approach to explaining teachers' adoption of digital technology in education. *Computers & Education, 128*, 13-35. https://doi.org/10.1016/j.compedu.2018.09.009

Scherer, R., & Teo, T. (2019). Unpacking teachers' intentions to integrate technology: A meta-analysis. *Educational Research Review, 27*, 90-109. https://doi.org/10.1016/j.edurev.2019.03.001

Scherer, R., Tondeur, J., Siddiq, F., & Baran, E. (2018). The importance of attitudes toward technology for pre-service teachers' technological, pedagogical, and content knowledge: Comparing structural equation modeling approaches. *Computers in Human Behavior*, *80*, 67-80. https://doi.org/10.1016/j.chb.2017.11.003

Schmidt, F. L., & Hunter, J. E. (2014). *Methods of meta-analysis: Correcting error and bias in research findings* (3 ed.). Thousand Oaks, CA: Sage.

Sharma, R., Yetton, P., & Crawford, J. (2009). Estimating the effect of common method variance: The method-method pair technique with an illustration from TAM research. *MIS Quarterly, 33*(3), 473-490. Retrieved from https://misq.org/misq/downloads/download/article/15/

Sheng, Z., Kong, W., Cortina, J. M., & Hou, S. (2016). Analyzing matrices of meta-analytic correlations: current practices and recommendations. *Research Synthesis Methods, 7*(2), 187-208. https://doi.org/10.1002/jrsm.1206

Siddiq, F., Scherer, R., & Tondeur, J. (2016). Teachers' emphasis on developing students' digital information and communication skills (TEDDICS): A new construct in 21st century education. *Computers & Education, 92-93*, 1-14. https://doi.org/10.1016/j.compedu.2015.10.006

Straub, E. T. (2009). Understanding Technology Adoption: Theory and Future Directions for Informal Learning. *Review of Educational Research, 79*(2), 625-649. https://doi.org/10.3102/0034654308325896

Šumak, B., Heričko, M., & Pušnik, M. (2011). A meta-analysis of e-learning technology acceptance: The role of user types and e-learning technology types. *Computers in Human Behavior, 27*(6), 2067-2077. https://doi.org/10.1016/j.chb.2011.08.005

*Teo, T. (2015). Comparing pre-service and in-service teachers' acceptance of technology: Assessment of measurement invariance and latent mean differences. *Computers & Education, 83*, 22-31. https://doi.org/10.1016/j.compedu.2014.11.015

*Teo, T., Ruangrit, N., Khlaisang, J., Thammetar, T., & Sunphakitjumnong, K. (2014). Exporing e-learning acceptance among university students in Thailand: A national survey. *Journal of Educational Computing Research, 50*(4), 498-506. http://dx.doi.org/10.2190/EC.50.4.c

Teo, T. (2018). Students' and Teachers' Intention to Use Technology: Assessing their Measurement Equivalence and Structural Invariance. *Journal of Educational Computing Research*, https://doi.org/10.1177/0735633117749430

Teo, T., C. B. Lee, et al. (2009). Assessing the intention to use technology among pre-service teachers in Singapore and Malaysia: A multigroup invariance analysis of the Technology Acceptance Model (TAM). *Computers & Education, 53*(3), 1000-1009. https://doi.org/10.1016/j.compedu.2009.05.017

Tondeur, J., Pareja Roblin, N., van Braak, J., Fisser, P., & Voogt, J. (2013). Technological Pedagogical Content Knowledge in teacher education: In search of a new curriculum. *Educational Studies, 39*(2), 239-243. https://doi.org/10.1080/03055698.2012.713548

Turner, M., Kitchenham, B., Brereton, P., Charters, S., & Budgen, D. (2010). Does the technology acceptance model predict actual use? A systematic literature review. *Information and Software Technology, 52*(5), 463-479. https://doi.org/10.1016/j.infsof.2009.11.005

Vangrieken, K., Grosemans, I., Dochy, F., & Kyndt, E. (2017). Teacher autonomy and collaboration: A paradox? Conceptualising and measuring teachers' autonomy and collaborative attitude. *Teaching and Teacher Education, 67*, 302-315. https://doi.org/10.1016/j.tate.2017.06.021

Venkatesh, V., & Bala, H. (2008). Technology acceptance model 3 and a research agenda on interventions. *Decision Sciences, 39*(2), 273-315. https://doi.org/10.1111/j.1540-5915.2008.00192.x

Venkatesh, V., Morris, M. G., Davis, G. B., & Davis, F. D. (2003). User Acceptance of Information Technology: Toward a Unified View. *MIS Quarterly, 27*(3), 425-478. https://doi.org/10.2307/30036540

Wolf, E. J., Harrington, K. M., Clark, S. L., & Miller, M. W. (2013). Sample Size Requirements for Structural Equation Models: An Evaluation of Power, Bias, and Solution Propriety. *Educational and Psychological Measurement, 76*(6), 913-934. https://doi.org/10.1177/0013164413495237

Yen, P.-Y., Sousa, K. H., & Bakken, S. (2014). Examining construct and predictive validity of the Health-IT Usability Evaluation Scale: Confirmatory factor analysis and structural equation modeling results. *J Am Med Inform Assoc, 21*, 241-248. https://doi.org/10.1136/amiajnl-2013-001811

Zhang, L., Zhu, J., & Liu, Q. (2012). A meta-analysis of mobile commerce adoption and the moderating effect of culture. *Computers in Human Behavior, 28*(5), 1902-1911. https://doi.org/10.1016/j.chb.2012.05.008

Tables

Table 1

Aggregated correlation matrix of the technology acceptance variables (PU, PEOU, ATT, SN, TSE, FC) and the two outcome variables (BI, USE)

	PU	PEOU	ATT	SN	TSE	FC	BI
PEOU							
$\bar{r}$	**.47***						
95 % CI	[.43, .50]						
N	28639						
k_m	108						
τ^2	0.026*						
$SE(\tau^2)$	0.004						
I^2	90.9 %						
ATT							
$\bar{r}$	**.58***	**.51***					
95 % CI	[.54, .61]	[.48, .55]					
N	21829	19871					
k_m	73	70					
τ^2	0.020*	0.024*					
$SE(\tau^2)$	0.004	0.005					
I^2	87.8 %	88.9 %					
SN							
$\bar{r}$	**.38***	**.25***	**.31***				
95 % CI	[.33, .42]	[.21, .29]	[.25, .36]				
N	12265	11886	8575				
k_m	40	38	23				
τ^2	0.021*	0.015*	0.013*				
$SE(\tau^2)$	0.006	0.004	0.005				

I^2	86.3 %	81.3 %	78.5 %				
TSE							
$\bar{r}$	**.41***	**.46***	**.39***	**.27***			
95 % CI	[.36, .46]	[.40, .51]	[.32, .46]	[.18, .36]			
N	16636	10871	8229	4682			
k_m	53	43	24	16			
τ^2	0.031*	0.032*	0.023*	0.029*			
$SE(\tau^2)$	0.007	0.008	0.008	0.012			
I^2	90.4 %	90.5 %	86.8 %	89.4 %			
FC							
$\bar{r}$	**.32***	**.39***	**.36***	**.26***	**.27***		
95 % CI	[.28, .36]	[.34, .44]	[.30, .42]	[.21, .30]	[.20, .34]		
N	19416	14636	11443	10011	10945		
k_m	55	47	27	32	29		
τ^2	0.021*	0.028*	0.021*	0.014*	0.028*		
$SE(\tau^2)$	0.005	0.007	0.006	0.005	0.008		
I^2	86.7 %	89.3 %	86.4 %	79.9 %	89.2 %		
BI							
$\bar{r}$	**.54***	**.40***	**.51***	**.34***	**.39***	**.35***	
95 % CI	[.51, .58]	[.37, .44]	[.46, .56]	[.28, .39]	[.34, .44]	[.30, .40]	
N	25307	20993	17981	9402	12175	12359	
k_m	89	79	57	31	43	38	
τ^2	0.025*	0.018*	0.028*	0.018*	0.028*	0.021*	
$SE(\tau^2)$	0.004	0.004	0.006	0.006	0.007	0.006	
I^2	91.0 %	85.3 %	90.4 %	84.0 %	89.3 %	86.4 %	
USE							
$\bar{r}$	**.39***	**.32***	**.40***	**.27***	**.42***	**.31***	**.44***
95 % CI	[.32, .46]	[.24, .39]	[.29, .51]	[.19, .35]	[.34, .49]	[.15, .47]	[.37, .52]
N	7604	6383	4252	2833	2873	2427	4749
k_m	24	20	13	8	12	7	14
τ^2	0.023*	0.027*	0.036*	0.008	0.010	0.042	0.016*
$SE(\tau^2)$	0.008	0.010	0.015	0.006	0.006	0.024	0.008

I^2	86.8 %	88.8 %	91.3 %	69.7 %	74.9 %	92.4 %	82.1 %

Note. The aggregated correlation matrix was based on a random-effects model quantifying the variation of correlations between the m = 128 correlation matrices (τ^2) that yielded k = 1113 correlations. $\bar{r}$ = Aggregated correlation between variables, 95 % CI = 95 % Wald confidence interval, N = Size of the teacher samples in the primary studies, k_m = Number of available correlations that were obtained from the m correlation matrices, I^2 = Heterogeneity coefficient. ATT = Attitudes toward technology, BI = Behavioral intentions to use technology, FC = Facilitating conditions, PEOU = Perceived ease of use, PU = Perceived usefulness, SN = Subjective norms, USE = Technology use. * $p < .01$

Table 2

Parameters of the three technology acceptance measurement models

Element	Parameter	**Model 1: One-factor model**		**Model 2: Two-factor model**		**Model 3: Three-factor model**	
		Estimate	95 % LBCI	Estimate	95 % LBCI	Estimate	95 % LBCI
Factor loadings							
	PEOU	0.671	[0.457, 0.533]	0.673 [a]	[0.640, 0.707]	0.669 [c]	[0.635, 0.704]
	PU	0.723	[0.690, 0.757]	0.725 [a]	[0.692, 0.759]	0.719 [c]	[0.684, 0.755]
	ATT	0.767	[0.729, 0.805]	0.769 [a]	[0.731, 0.807]	0.779 [d]	[0.737, 0.822]
	TSE	0.582	[0.535, 0.630]	0.583 [a]	[0.536, 0.631]	0.589 [d]	[0.541, 0.638]
	SN	0.443	[0.405, 0.483]	0.479 [b]	[0.425, 0.533]	0.479 [b]	[0.426, 0.534]
	FC	0.495	[0.457, 0.533]	0.538 [b]	[0.478, 0.598]	0.538 [b]	[0.478, 0.597]
Residual variances							
	PEOU	0.549	[0.503, 0.593]	0.547	[0.500, 0.591]	0.552	[0.505, 0.596]
	PU	0.477	[0.427, 0.524]	0.474	[0.424, 0.522]	0.483	[0.430, 0.532]
	ATT	0.412	[0.352, 0.469]	0.409	[0.348, 0.466]	0.393	[0.325, 0.457]
	TSE	0.661	[0.603, 0.714]	0.660	[0.602, 0.713]	0.653	[0.593, 0.708]
	SN	0.803	[0.767, 0.836]	0.771	[0.716, 0.819]	0.770	[0.715, 0.819]
	FC	0.755	[0.716, 0.791]	0.711	[0.643, 0.771]	0.711	[0.643, 0.771]
Factor correlations							
	gATT WITH EB	-	-	0.897	[0.807, 1.008]	-	-
	TP WITH ASB	-	-	-	-	0.999 [e]	-
	TP WITH EB	-	-	-	-	0.924	[0.821, 1.046]
	ASB WITH EB	-	-	-	-	0.851	[0.736, 0.986]

Note. 95 % LBCI = 95 % Likelihood-based confidence interval. ASB = Attitudes and self-beliefs, ATT = Attitudes toward technology, EB = External beliefs, FC = Facilitating conditions, gATT = general attitudes toward technology, gTA = general technology acceptance, PEOU = Perceived ease of use, PU = Perceived usefulness, SN = Subjective norms, TP = Technology perceptions, TSE = Technology self-efficacy.

[a] Variables assigned to the factor gATT, [b] Variables assigned to the factor EB, [c] Variables assigned to the factor TP, [d] Variables assigned to the factor ASB, [e] This correlation was constrained to 0.999 (Heywood case).

Table 3

Fit of the three factor models for subgroups of teachers and the specificity of technology in the technology acceptance measures

Subgroup	Model	$\chi^2(df)$	RMSEA	CFI	SRMR	AIC	BIC	Comparison	$\Delta\chi^2(\Delta df)$
Teacher level									
In-service teachers	1	28.9 (9), $p < .001$	0.011	0.990	0.054	10.9	-59.0	1 vs. 2	2.1 (1), $p = .15$
	2	26.9 (8), $p < .001$	0.012	0.991	0.053	10.9	-51.3	2 vs. 3	0.3 (1), $p = .56$
	3	26.5 (7), $p < .001$	0.013	0.990	0.053	12.5	-41.9	1 vs. 3	2.4 (2), $p = .30$
Pre-service teachers	1	16.0 (9), $p = .07$	0.006	0.996	0.039	-2.0	-73.0	1 vs. 2	3.1 (1), $p = .08$
	2	12.9 (8), $p = .11$	0.006	0.998	0.037	-3.1	-66.2	2 vs. 3	1.6 (1), $p = .20$
	3	11.3 (7), $p = .13$	0.006	0.998	0.036	-2.7	-57.9	1 vs. 3	4.7 (2), $p = .10$
Specificity of technology									
Technology in general	1	23.6 (9), $p < .01$	0.009	0.995	0.037	5.6	-65.1	1 vs. 2	6.8 (1), $p < .01$
	2	16.8 (8), $p < .05$	0.008	0.997	0.035	0.8	-62.0	2 vs. 3	-0.1 (1), $p = .99$
	3	16.9 (7), $p < .05$	0.009	0.997	0.035	2.9	-52.1	1 vs. 3	6.8 (2), $p < .05$
Specific technologies	1	17.8 (9), $p < .05$	0.007	0.994	0.049	-0.2	-70.5	1 vs. 2	0.1 (1), $p = .77$
	2	17.7 (8), $p < .05$	0.008	0.992	0.048	1.7	-60.7	2 vs. 3	1.4 (1), $p = .24$
	3	16.3 (7), $p < .05$	0.009	0.993	0.047	2.3	-52.3	1 vs. 3	1.5 (2), $p = .48$

Note. Model comparisons are based on the chi-square difference testing (see Brown, 2015).

Figures

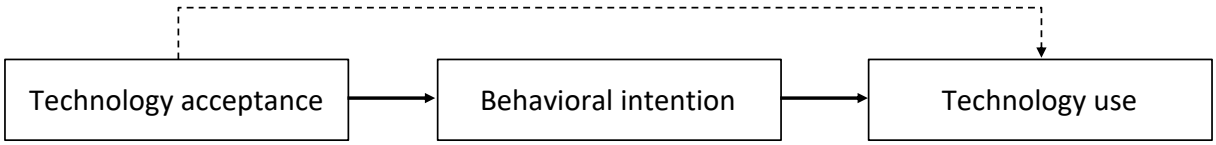

Figure 1. Structural model linking technology acceptance, behavioral intention, and technology use.

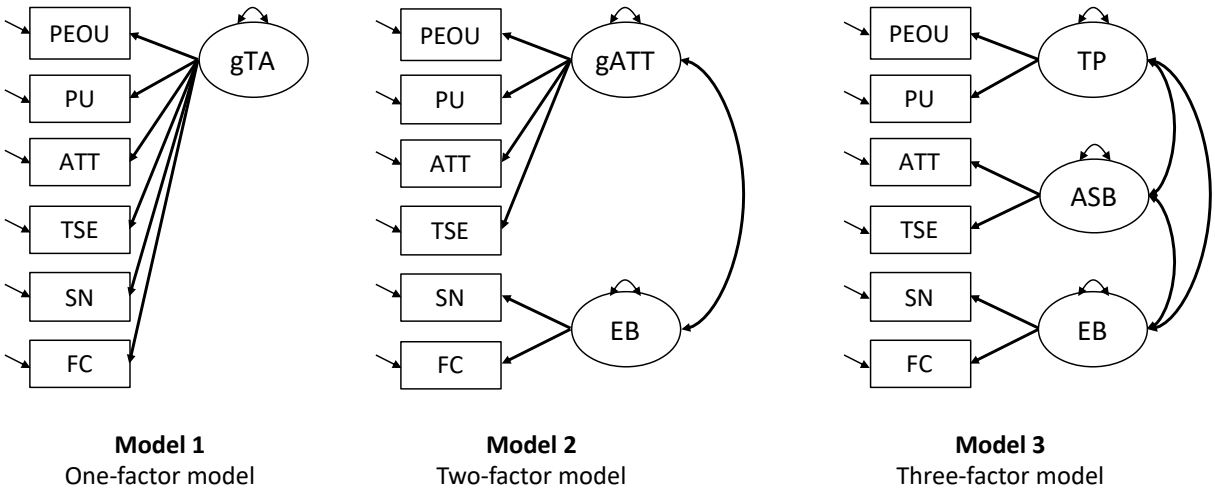

Figure 2. Three competing models of technology acceptance.

Note. ASB = Attitudes and self-beliefs, ATT = Attitudes toward technology, EB = External beliefs, FC = Facilitating conditions, gATT = general attitudes toward technology, gTA = general technology acceptance, PEOU = Perceived ease of use, PU = Perceived usefulness, SN = Subjective norms, TP = Technology perceptions, TSE = Technology self-efficacy.

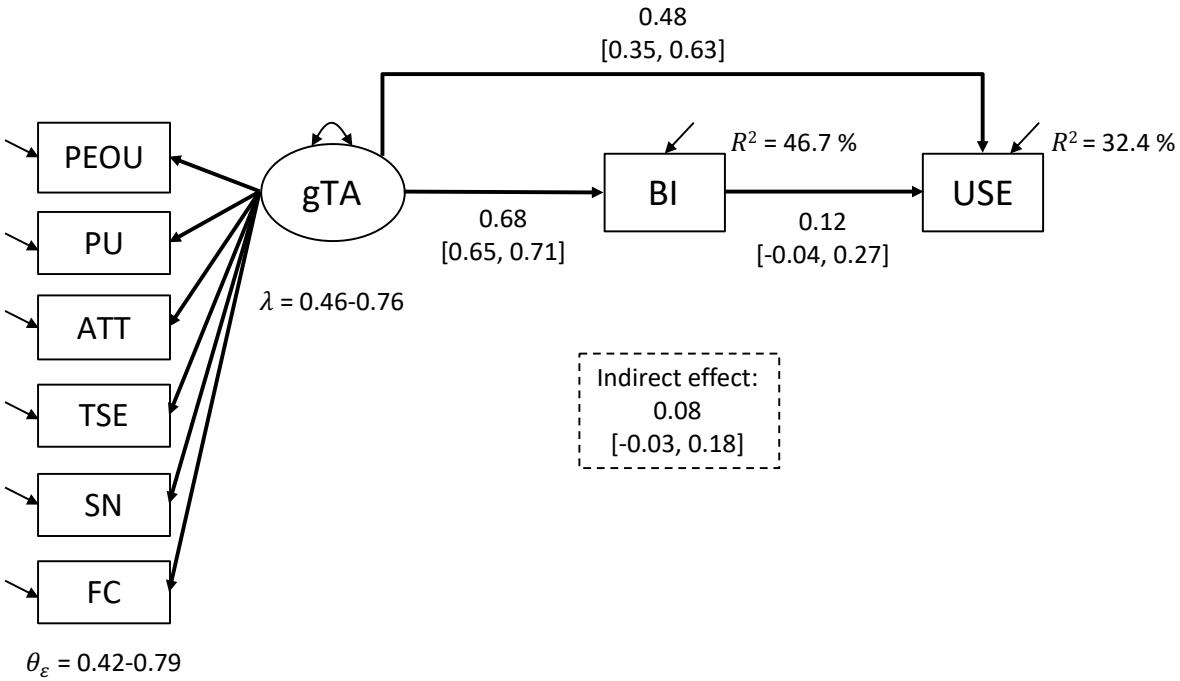

Figure 3. Meta-analytic structural equation model describing the relations between technology acceptance (gTA), behavioral intention (BI), and technology use (USE).

Note. The 95 % Likelihood-based confidence intervals are shown in brackets. ATT = Attitudes toward technology, FC = Facilitating conditions, PEOU = Perceived ease of use, PU = Perceived usefulness, SN = Subjective norms, TSE = Technology self-efficacy.

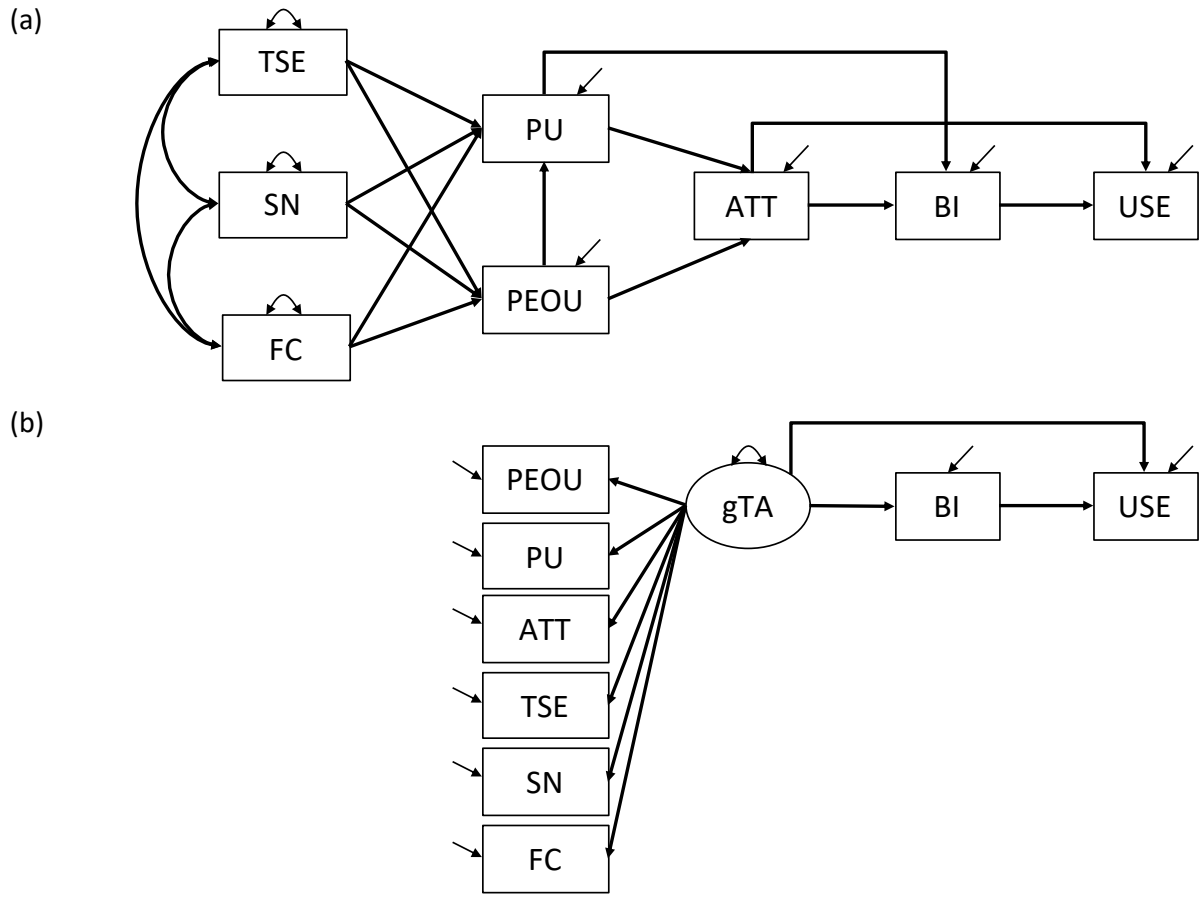

Figure 4. Conceptual models of technology acceptance hypothesizing (a) structural relations between the predictors of behavioral intentions (BI) and technology use (USE), and (b) a unidimensional representation of the technology acceptance variables as a general factor (gTA).

Note. PEOU = Perceived ease of use, PU = Perceived usefulness, ATT = Attitudes toward technology, TSE = Technology self-efficacy, SN = Subjective norms, FC = Facilitating conditions.